Waterproof Circular Connectors for Solder Terminations Meeting IP67

RoHS2

WEB Series

Fujikura

Waterproof
IP67

Lock Type
Bayonet

Safety Standard
UL

OUTLINE

WEB series is a waterproof connector which meets Class IP67 protection against water and dust when mated.

The insert arrangements for this series are the same as those of our JM series connectors with the threaded coupling design.

WEB series has a bayonet coupling design to be suitable for applications requiring quick positive coupling.

FEATURE

1. Bayonet Coupling

This series has a bayonet coupling design. The click sound after rotating the coupling ring gives you the indication of full coupling.

2. 5 Keys to Prevent Mismating

The shell has five keys. Alternate insert positions eliminate the connector mismating if more than one connector with the same size and arrangement is to be used in a system. The insulator is permanently positioned in the shell so that only a connector with the same degree of rotation can be mated with it.

3. Quick and Easy Termination

The contacts are preloaded in the connector. The solder cups are oriented in one direction to simplify termination.

4. UL

UL Approved : File No E72124

SPECIFICATIONS

Contact Size		#20 Contact	#16 Contact
Male Contact Diameter		1.0mm	1.6mm
Rated Voltage		250V AC(r.m.s.) or 350V DC	
Rated Current		5A ／ contact	10A ／ contact
Applicable Cable	Conductor Diameter	1.0mm max.	1.5mm max.
	Nominal Sectional Area	0.5mm^2 max.	1.25mm^2 max.
	Reference Wire Size	AWG #20 max.	AWG #16 max.
Operating Temperature		− 25˚C to ＋ 85˚C	
Insulation Resistance		1,000M Ω (min.) at 500V DC.	
Dielectric Withstanding Voltage		1,000V AC(r.m.s.) at 1 minute.	
Contact Resistance		5m Ω max.	
Waterproof Rating		IP67 (Mated condition)	
Vibration		Amplitude : 10-55H / 1.5mm	
Shock		Acceleration 50G.	
Durability		500 cycles	
Humidity(Stable Condition)		40˚C , 90-95%, 96 hours	
Heat Cycle		− 40˚C to ＋ 100˚C , 5 cycles	
Salt Spray		5%, 35˚C , 48hours	

Note: AWG wire sizes for reference only.

MATERIAL / FINISH

RoHS Compliant

Item	Material/Finish
Insert	Synthetic Resin / Blue
Contact	Copper Alloy / Silver Plating or Gold Plating
Shell	Zinc Alloy / Zinc Plating, Trivalent Chromium Treatment(Black)
Cable Clamp	Aluminum Alloy / Zinc Plating, Trivalent Chromium Treatment(Black)
Bushing	Synthetic Rubber / Black
Protection Cap	Synthetic Rubber / Black, Aluminum Alloy / Zinc Plating, Trivalent Chromium Treatment(Black) Zinc Alloy / Zinc Plating, Trivalent Chromium Treatment(Black)

◎ Specifications and/or dimensions in this catalog are subject to change without notice. ◎ Your checking the latest specifications with our drawings would be highly appreciated.

Insert Arrangement List

Number of Contacts	3	4	5	7		
Shell Size	13	21	13	13	16	21
Insert Arrnagement	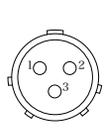	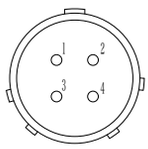			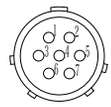	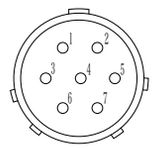
Insert No.	1303	2104	1305	1307	1607	2107

Number of Contacts	10		16		19
Shell Size	16	21	21	25	21
Insert Arrnagement	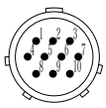	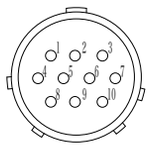	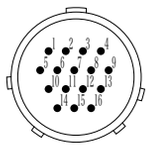	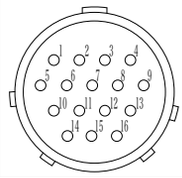	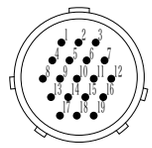
Insert No.	1610	2110	2116	2516	2119

Number of Contacts	24	28	32
Shell Size	25	25	25
Insert Arrnagement	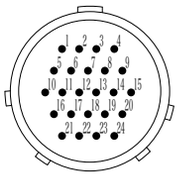	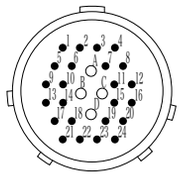	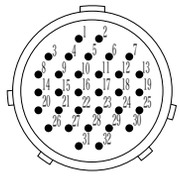
Insert No.	2524	2528	2532

●・・・φ 1.0mm Contact (#20 Contact)　○・・・φ 1.6mm Contact (#16 Contact)

Note : Front view of pin insert or rear view of socket insert
Normal key position illustrated.

Alternate Insert Positions

Shell Size	Number of Contacts \ Alternate Insert Position \ Change Angle	θ 1	θ 2	θ 3
		X	Y	Z
13	3	30°	60°	180°
	5	45°	90°	315°
	7	45°	90°	315°
16	7	30°	135°	
	10	45°	90°	315°
21	4	30°	135°	
	7	30°	135°	
	10	45°	90°	315°
	16	45°	90°	315°
	19	45°	90°	315°
25	16	45°	90°	315°
	24	45°	90°	315°
	28	45°	90°	315°
	32	45°	90°	315°

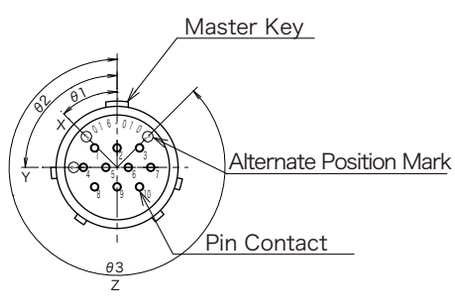

Front View of Pin Insert or
Rear View of Socket Insert

◎ Specifications and/or dimensions in this catalog are subject to change without notice. ◎ Your checking the latest specifications with our drawings would be highly appreciated.

Unit : mm

▶ WEBSP (Straight Plug)

WEBSP2524M □ G -1-D(R1)

① ② ③ ④ ⑤ ⑥ ⑦ ⑧

① Connector Style	SP : Straight Plug
② Shell Size	13, 16, 21 and 25
③ Number of Contacts	03, 04, 05, 07, 10, 16, 19, 24, 28 and 32
④ Contact Style	M : Male Contact(Pin) F : Female Contact(Socket)
⑤ Alternate Insert Position	Omit : Standard Position X, Y, Z : Alternate Insert Position
⑥ Contact Plating	Omit : Silver Plating (Standard) G : Gold Plating
⑦ Bushing Size	Refer to the following table
⑧ Finish	D : Trivalent Chromium Treatment(Black)

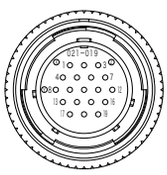

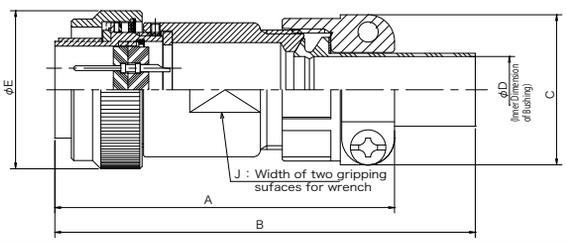

Shell Size	Number of Contacts	Part Number	A(max.)	B(max.)	C	φ D	φ E	J	Applicable Cable Size
13	3	WEBSP1303□□□-1-D(R1)	73	90	27.2	9.0	25.5	19.0	7.0～9.0
	5	WEBSP1305□□□-1-D(R1)							
	7	WEBSP1307□□□-1-D(R1)							
16	7	WEBSP1607□□□-1-D(R1)			29.4	12.0	29.5	22.7	10.0～12.0
	7	WEBSP1607□□□-2-D(R1)				10.5			8.5～10.5
	10	WEBSP1610□□□-1-D(R1)				12.0			10.0～12.0
	10	WEBSP1610□□□-2-D(R1)				10.5			8.5～10.5
21	4	WEBSP2104□□□-1-D(R1)			31.8	14.1	33.5	26.7	10.5～14.1
	4	WEBSP2104□□□-2-D(R1)				11.0			8.5～11.0
	4	WEBSP2104□□□-3-D(R1)				8.7			6.5～8.7
	7	WEBSP2107□□□-1-D(R1)				14.1			10.5～14.1
	7	WEBSP2107□□□-2-D(R1)				11.0			8.5～11.0
	7	WEBSP2107□□□-3-D(R1)				8.7			6.5～8.7
	10	WEBSP2110□□□-1-D(R1)				14.1			10.5～14.1
	10	WEBSP2110□□□-2-D(R1)				11.0			8.5～11.0
	10	WEBSP2110□□□-3-D(R1)				8.7			6.5～8.7
	16	WEBSP2116□□□-1-D(R1)				14.1			10.5～14.1
	16	WEBSP2116□□□-2-D(R1)				11.0			8.5～11.0
	16	WEBSP2116□□□-3-D(R1)				8.7			6.5～8.7
	19	WEBSP2119□□□-1-D(R1)				14.1			10.5～14.1
	19	WEBSP2119□□□-2-D(R1)				11.0			8.5～11.0
	19	WEBSP2119□□□-3-D(R1)				8.7			6.5～8.7
25	16	WEBSP2516□□□-1-D(R1)			37.0	16.0	37.4	31.5	12.5～16.0
	16	WEBSP2516□□□-2-D(R1)				13.0			9.5～13.0
	16	WEBSP2516□□□-3-D(R1)				10.0			6.8～10.0
	16	WEBSP2516□□□-7-D(R1)				17.0			14.5～17.0
	24	WEBSP2524□□□-1-D(R1)				16.0			12.5～16.0
	24	WEBSP2524□□□-2-D(R1)				13.0			9.5～13.0
	24	WEBSP2524□□□-3-D(R1)				10.0			6.8～10.0
	24	WEBSP2524□□□-7-D(R1)				17.0			14.5～17.0
	28	WEBSP2528□□□-1-D(R1)				16.0			12.5～16.0
	28	WEBSP2528□□□-2-D(R1)				13.0			9.5～13.0
	28	WEBSP2528□□□-3-D(R1)				10.0			6.8～10.0
	28	WEBSP2528□□□-7-D(R1)				17.0			14.5～17.0
	32	WEBSP2532□□□-1-D(R1)				16.0			12.5～16.0
	32	WEBSP2532□□□-2-D(R1)				13.0			9.5～13.0
	32	WEBSP2532□□□-3-D(R1)				10.0			6.8～10.0
	32	WEBSP2532□□□-7-D(R1)				17.0			14.5～17.0

※ Depending on the cable used, the contact between bushing and cable may be discolored.

◎ Specifications and/or dimensions in this catalog are subject to change without notice. ◎ Your checking the latest specifications with our drawings would be highly appreciated.

Unit : mm

▶WEBWR (Wall Receptacle)

WEBWR2524M □ GS-1-D(R1)
① ② ③ ④ ⑤ ⑥⑦ ⑧ ⑨

① Connector Style	WR : Wall Receptacle
② Shell Size	13, 16, 21and 25
③ Number of Contacts	03, 04, 05, 07, 10, 16, 19, 24, 28 and 32
④ Contact Style	M : Male Contact(Pin) F : Female Contact(Socket)
⑤ Alternate Insert Position	Omit : Standard Position X, Y, Z : Alternate Insert Position
⑥ Contact Plating	Omit : Silver Plating (Standard) G : Gold Plating
⑦ Flange Gasket	Omit : Less Gasket S : With Gasket (R and WR Only)
⑧ Bushing Size	Refer to the following table
⑨ Finish	D : Trivalent Chromium Treatment (Black)

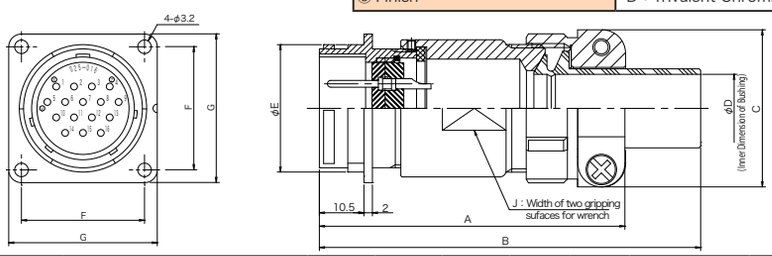

Shell Size	Number of Contacts	Part Number	A(max.)	B(max.)	C	φ D	φ E	F	G	J	Applicable Cable Size
13	3	WEBWR1303 □□□□ -1-D(R1)	73	90	27.2	9.0	18	20	26	19.0	7.0 ～ 9.0
	5	WEBWR1305 □□□□ -1-D(R1)									
	7	WEBWR1307 □□□□ -1-D(R1)									
16	7	WEBWR1607 □□□□ -1-D(R1)			29.5	12.0	22	23	29	22.7	10.0 ～ 12.0
	7	WEBWR1607 □□□□ -2-D(R1)				10.5					8.5 ～ 10.5
	10	WEBWR1610 □□□□ -1-D(R1)				12.0					10.0 ～ 12.0
	10	WEBWR1610 □□□□ -2-D(R1)				10.5					8.5 ～ 10.5
21	4	WEBWR2104 □□□□ -1-D(R1)			31.8	14.1	26	26	32	26.7	10.5 ～ 14.1
	4	WEBWR2104 □□□□ -2-D(R1)				11.0					8.5 ～ 11.0
	4	WEBWR2104 □□□□ -3-D(R1)				8.7					6.5 ～ 8.7
	7	WEBWR2107 □□□□ -1-D(R1)				14.1					10.5 ～ 14.1
	7	WEBWR2107 □□□□ -2-D(R1)				11.0					8.5 ～ 11.0
	7	WEBWR2107 □□□□ -3-D(R1)				8.7					6.5 ～ 8.7
	10	WEBWR2110 □□□□ -1-D(R1)				14.1					10.5 ～ 14.1
	10	WEBWR2110 □□□□ -2-D(R1)				11.0					8.5 ～ 11.0
	10	WEBWR2110 □□□□ -3-D(R1)				8.7					6.5 ～ 8.7
	16	WEBWR2116 □□□□ -1-D(R1)				14.1					10.5 ～ 14.1
	16	WEBWR2116 □□□□ -2-D(R1)				11.0					8.5 ～ 11.0
	16	WEBWR2116 □□□□ -3-D(R1)				8.7					6.5 ～ 8.7
	19	WEBWR2119 □□□□ -1-D(R1)				14.1					10.5 ～ 14.1
	19	WEBWR2119 □□□□ -2-D(R1)				11.0					8.5 ～ 11.0
	19	WEBWR2119 □□□□ -3-D(R1)				8.7					6.5 ～ 8.7
25	16	WEBWR2516 □□□□ -1-D(R1)			37.0	16.0	30	29	35	31.5	12.5 ～ 16.0
	16	WEBWR2516 □□□□ -2-D(R1)				13.0					9.5 ～ 13.0
	16	WEBWR2516 □□□□ -3-D(R1)				10.0					6.8 ～ 10.0
	16	WEBWR2516 □□□□ -7-D(R1)				17.0					14.5 ～ 17.0
	24	WEBWR2524 □□□□ -1-D(R1)				16.0					12.5 ～ 16.0
	24	WEBWR2524 □□□□ -2-D(R1)				13.0					9.5 ～ 13.0
	24	WEBWR2524 □□□□ -3-D(R1)				10.0					6.8 ～ 10.0
	24	WEBWR2524 □□□□ -7-D(R1)				17.0					14.5 ～ 17.0
	28	WEBWR2528 □□□□ -1-D(R1)				16.0					12.5 ～ 16.0
	28	WEBWR2528 □□□□ -2-D(R1)				13.0					9.5 ～ 13.0
	28	WEBWR2528 □□□□ -3-D(R1)				10.0					6.8 ～ 10.0
	28	WEBWR2528 □□□□ -7-D(R1)				17.0					14.5 ～ 17.0
	32	WEBWR2532 □□□□ -1-D(R1)				16.0					12.5 ～ 16.0
	32	WEBWR2532 □□□□ -2-D(R1)				13.0					9.5 ～ 13.0
	32	WEBWR2532 □□□□ -3-D(R1)				10.0					6.8 ～ 10.0
	32	WEBWR2532 □□□□ -7-D(R1)				17.0					14.5 ～ 17.0

※ Depending on the cable used, the contact between bushing and cable may be discolored.

◎ Specifications and/or dimensions in this catalog are subject to change without notice. ◎ Your checking the latest specifications with our drawings would be highly appreciated.

Unit : mm

▶WEBCR（Cable Receptacle）

WEBCR2524M □ G-1-D(R1)
① ② ③ ④ ⑤ ⑥ ⑦ ⑧

① Connector Style	CR : Cable Receptacle
② Shell Size	13, 16, 21 and 25
③ Number of Contacts	03, 04, 05, 07, 10, 16, 19, 24, 28 and 32
④ Contact Style	M : Male Contact(Pin) F : Female Contact(Socket)
⑤ Alternate Insert Position	Omit : Standard Position X, Y, Z : Alternate Insert Position
⑥ Contact Plating	Omit : Silver Plating (Standard) G : Gold Plating
⑦ Bushing Size	Refer to the following table
⑧ Finish	D : Trivalent Chromium Treatment (Black)

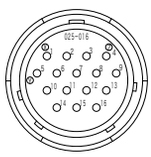

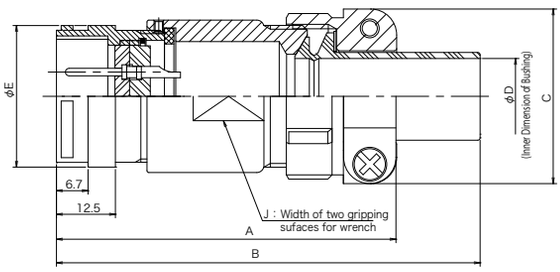

Shell Size	Number of Contacts	Part Number	A(max.)	B(max.)	C	φ D	φ E	J	Applicable Cable Size
13	3	WEBCR1303 □□□ -1-D(R1)	73	90	27.2	9.0	18	19.0	7.0 ～ 9.0
	5	WEBCR1305 □□□ -1-D(R1)							
	7	WEBCR1305 □□□ -1-D(R1)							
16	7	WEBCR1607 □□□ -1-D(R1)			29.5	12.0	22	22.7	10.0 ～ 12.0
	7	WEBCR1607 □□□ -2-D(R1)				10.5			8.5 ～ 10.5
	10	WEBCR1610 □□□ -1-D(R1)				12.0			10.0 ～ 12.0
	10	WEBCR1610 □□□ -2-D(R1)				10.5			8.5 ～ 10.5
21	4	WEBCR2104 □□□ -1-D(R1)			31.8	14.1	26	26.7	10.5 ～ 14.1
	4	WEBCR2104 □□□ -2-D(R1)				11.0			8.5 ～ 11.0
	4	WEBCR2104 □□□ -3-D(R1)				8.7			6.5 ～ 8.7
	7	WEBCR2107 □□□ -1-D(R1)				14.1			10.5 ～ 14.1
	7	WEBCR2107 □□□ -2-D(R1)				11.0			8.5 ～ 11.0
	7	WEBCR2107 □□□ -3-D(R1)				8.7			6.5 ～ 8.7
	10	WEBCR2110 □□□ -1-D(R1)				14.1			10.5 ～ 14.1
	10	WEBCR2110 □□□ -2-D(R1)				11.0			8.5 ～ 11.0
	10	WEBCR2110 □□□ -3-D(R1)				8.7			6.5 ～ 8.7
	16	WEBCR2116 □□□ -1-D(R1)				14.1			10.5 ～ 14.1
	16	WEBCR2116 □□□ -2-D(R1)				11.0			8.5 ～ 11.0
	16	WEBCR2116 □□□ -3-D(R1)				8.7			6.5 ～ 8.7
	19	WEBCR2119 □□□ -1-D(R1)				14.1			10.5 ～ 14.1
	19	WEBCR2119 □□□ -2-D(R1)				11.0			8.5 ～ 11.0
	19	WEBCR2119 □□□ -3-D(R1)				8.7			6.5 ～ 8.7
25	16	WEBCR2516 □□□ -1-D(R1)			37.0	16.0	30	31.5	12.5 ～ 16.0
	16	WEBCR2516 □□□ -2-D(R1)				13.0			9.5 ～ 13.0
	16	WEBCR2516 □□□ -3-D(R1)				10.0			6.8 ～ 10.0
	16	WEBCR2516 □□□ -7-D(R1)				17.0			14.5 ～ 17.0
	24	WEBCR2524 □□□ -1-D(R1)				16.0			12.5 ～ 16.0
	24	WEBCR2524 □□□ -2-D(R1)				13.0			9.5 ～ 13.0
	24	WEBCR2524 □□□ -3-D(R1)				10.0			6.8 ～ 10.0
	24	WEBCR2524 □□□ -7-D(R1)				17.0			14.5 ～ 17.0
	28	WEBCR2528 □□□ -1-D(R1)				16.0			12.5 ～ 16.0
	28	WEBCR2528 □□□ -2-D(R1)				13.0			9.5 ～ 13.0
	28	WEBCR2528 □□□ -3-D(R1)				10.0			6.8 ～ 10.0
	28	WEBCR2528 □□□ -7-D(R1)				17.0			14.5 ～ 17.0
	32	WEBCR2532 □□□ -1-D(R1)				16.0			12.5 ～ 16.0
	32	WEBCR2532 □□□ -2-D(R1)				13.0			9.5 ～ 13.0
	32	WEBCR2532 □□□ -3-D(R1)				10.0			6.8 ～ 10.0
	32	WEBCR2532 □□□ -7-D(R1)				17.0			14.5 ～ 17.0

※ Depending on the cable used, the contact between bushing and cable may be discolored.

◎ Specifications and/or dimensions in this catalog are subject to change without notice. ◎ Your checking the latest specifications with our drawings would be highly appreciated.

Unit : mm

▶WEBR (Box Receptacle)

WEBR2524M □ GS -D(R1)
① ② ③ ④ ⑤ ⑥⑦ ⑧

WEBR2524M □ G -D
① ② ③ ④ ⑤ ⑥ ⑧

① Connector Style	R : Box Receptacle
② Shell Size	13, 16, 21 and 25
③ Number of Contacts	03, 04, 05, 07, 10, 16, 19, 24, 28 and 32
④ Contact Style	M : Male Contact(Pin) F : Female Contact(Socket)
⑤ Alternate Insert Position	Omit : Standard Position X, Y, Z : Alternate Insert Position
⑥ Contact Plating	Omit : Silver Plating (Standard) G : Gold Plating
⑦ Flange Gasket	Omit : Less Gasket S : With Gasket (R and WR Only)
⑧ Finish	D : Trivalent Chromium Treatment (Black)

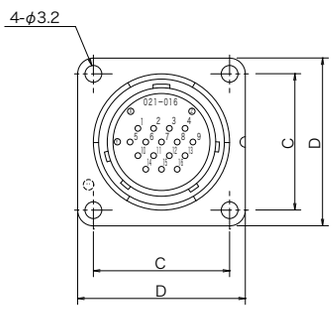

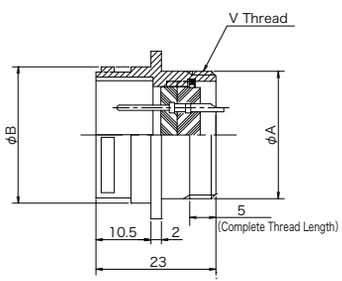

Shell Size	Number of Contacts	Part Number	ϕ A	ϕ B	C	D	V
13	3	WEBR1303 □□□□ -D	16	18	20	26	M16
	5	WEBR1305 □□□□ -D	16	18	20	26	M16
	7	WEBR1307 □□□□ -D	16	18	20	26	M16
16	7	WEBR1607 □□□□ -D	20	22	23	29	M20
	10	WEBR1610 □□□□ -D	20	22	23	29	M20
21	4	WEBR2104 □□□□ -D	24	26	26	32	M24
	7	WEBR2107 □□□□ -D	24	26	26	32	M24
	10	WEBR2110 □□□□ -D	24	26	26	32	M24
	16	WEBR2116 □□□□ -D	24	26	26	32	M24
	19	WEBR2119 □□□□ -D	24	26	26	32	M24
25	16	WEBR2516 □□□□ -D	28	30	29	35	M28
	24	WEBR2524 □□□□ -D	28	30	29	35	M28
	28	WEBR2528 □□□□ -D	28	30	29	35	M28
	32	WEBR2532 □□□□ -D	28	30	29	35	M28

◎ Specifications and/or dimensions in this catalog are subject to change without notice. ◎ Your checking the latest specifications with our drawings would be highly appreciated.

Unit : mm

WEBR/WEBWR Panel Mounting and Cutout Dimensions

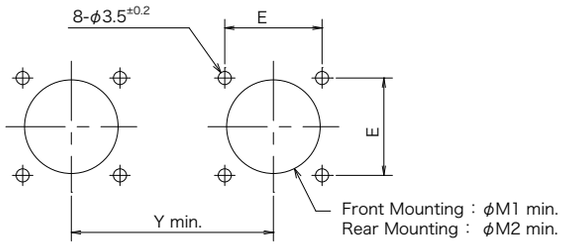

Panel Cutout for Two Connectors of Same Shell Size

Shell Size	Mounting Hole Pitch	Front Mounting Diameter	Rear Mounting Diameter	Serial Mounting Pitch
	E ±0.2	M1 (min.)	M2(min.)	Y(min.)
13	20	17	19	42
16	23	21	23	46
21	26	25	27	50
25	29	29	31	54

Note : The panel thickness for the rear mounting is as follows.
Connector without Gasket : 3 mm max.
Connector with Gasket : 2 mm max.

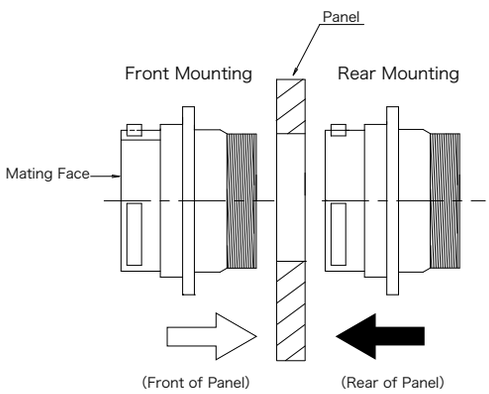

◎ Specifications and/or dimensions in this catalog are subject to change without notice. ◎ Your checking the latest specifications with our drawings would be highly appreciated.

Unit : mm

▶Protection Cap

EBPC25RA-D(R1)
① ② ③

① Cap Style	PC : Plug RC : Receptacle
② Shell Size	13,16,21,25
③ Material	–D : Metal
	RA-D : Rubber

Rubber Protection Cap

EBPC □□ RA-D(R1)
(Plug Cap)

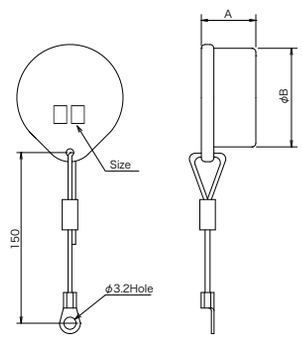

Part Number	A	ϕ B
EBPC13RA-D(R1)	26.5	31.6
EBPC16RA-D(R1)	26.5	35.6
EBPC21RA-D(R1)	26.5	39.6
EBPC25RA-D(R1)	26.5	43.5

EBRC □□ RA-D(R1)
(Receptacle Cap)

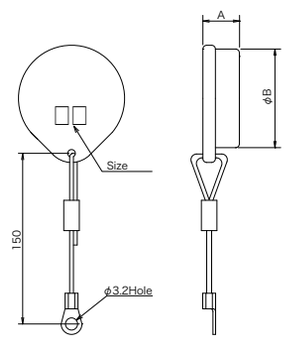

Part Number	A	ϕ B
EBRC13RA-D(R1)	9.5	22.0
EBRC16RA-D(R1)	9.5	26.0
EBRC21RA-D(R1)	9.5	30.0
EBRC25RA-D(R1)	9.5	34.0

Metal Protection Cap

EBPC □□ -D(R1)
(Plug Cap)

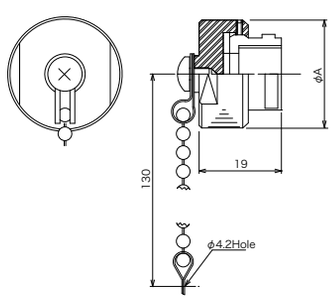

Part Number	A
EBPC13-D(R1)	24.4
EBPC16-D(R1)	28.4
EBPC21-D(R1)	32.4
EBPC25-D(R1)	36.4

EBRC □□ -D(R1)
(Receptacle Cap)

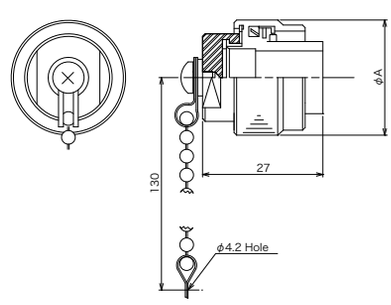

Part Number	A
EBRC13-D(R1)	25.5
EBRC16-D(R1)	29.5
EBRC21-D(R1)	33.5
EBRC25-D(R1)	37.4

◎ Specifications and/or dimensions in this catalog are subject to change without notice. ◎ Your checking the latest specifications with our drawings would be highly appreciated.