RoHS2

Crimp Type

17DE Series

DDK Ltd.

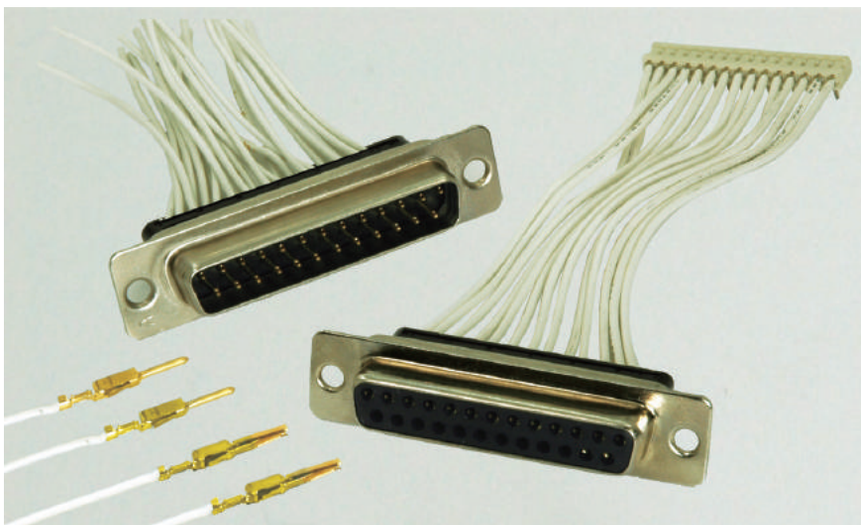

FEATURE

- Connector for crimp-wiring equipped with crimp-type press-contacts (compatible with AWG 22 to 30)
- Number of contacts : 9, 15, 25 and 37
- Ni-plated metal shell surface; beat-process to plug-connector shell
- Connection of cable and plug can be shielded by a metalize-finished hood, improving resistance against EMI. (Aangled hood are not applicable.)

SPECIFICATIONS

Rated Voltage	300V AC (r.m.s.)
Rated Current	3A / Contact
Dielectric Withstand Voltage	1,000V AC (r.m.s.) at 1 minute
Insulation Resistance	1000M Ω (min.) at 500V DC
Contact Resistance	20m Ω max.
Applicable Wire	Stranded wire of AWG 22, 24, 26, 28, 30 Outer diameter of insulator : ϕ 0.8 to ϕ 1.4
Operating Temperature	− 25˚C to + 85˚C

MATERIAL/FINISH

RoHS Compliant

Item	Material / Finish
Block	PBT resin (UL94V-0) / Color Black
Shell	Steel / Nickel Plating
Contact	Copper alloy / Au over Nickel plating

◎ Specifications and/or dimensions in this catalog are subject to change without notice.
Please varify the latest specifications with our drawings.

Unit : mm

Crimp-Type Connectors

17DE-13250-C

- Connector Style
  1 : Socket Connctor
  2 : Pin Connector
- Shell Plating
  3 : Nickel Plating
- Number of Contact
  09 : 9 Pin
  15 : 15 Pin
  25 : 25 Pin
  37 : 37 Pin
- Termination
  C : Crimp Type

17DE-23250-C

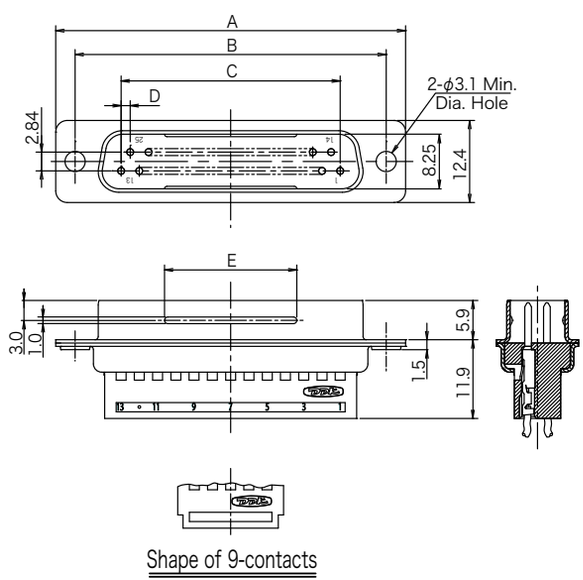

Shape of 9-contacts

17DE-13250-C

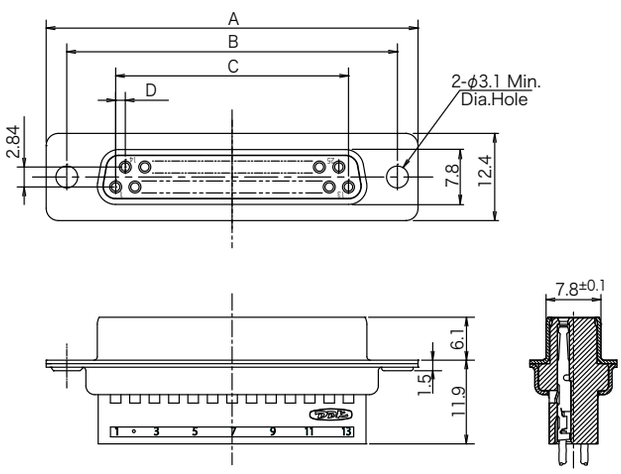

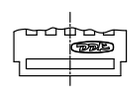

Shape of 9-contacts

Number of Contact	Part Number	A	B	C	D	E
09	17DE-23090-C	30.7	24.99	10.98	1.37	8.0
15	17DE-23150-C	39.0	33.32	19.20	1.37	12.0
25	17DE-23250-C	52.9	47.04	33.12	1.38	20.0
37	17DE-23370-C	69.2	63.50	49.68	1.38	20.0

Number of Contact	Part Number	A	B	C	D
09	17DE-13090-C	30.7	24.99	10.98	1.37
15	17DE-13150-C	39.0	33.32	19.20	1.37
25	17DE-13250-C	52.9	47.04	33.12	1.38
37	17DE-13370-C	69.2	63.50	49.68	1.38

◎ Specifications and/or dimensions in this catalog are subject to change without notice.
Please varify the latest specifications with our drawings.

Unit : mm

Crimp-Type Contact

17D-303PCR(R10000)

- Contact Plating (Mating area)
  3 : Au Flash over Nickel Plating
- Applicable Wire
  03 : AWG26 to 30 (Stranded wire)
  Outer diameter of insulator : ϕ 0.8 to 1.2
  04 : AWG22 to 24 (Stranded wire)
  Outer diameter of insulator : ϕ 1.1 to 1.4
- Number of Contact
  R10000 : Reel Contacts, 10000/Reel
  P500 : Bulk Contacts, 500/Pack
- Rear-release type
- Contact Style
  S : Socket Contact
  P : Pin Contact

● Pin Contact

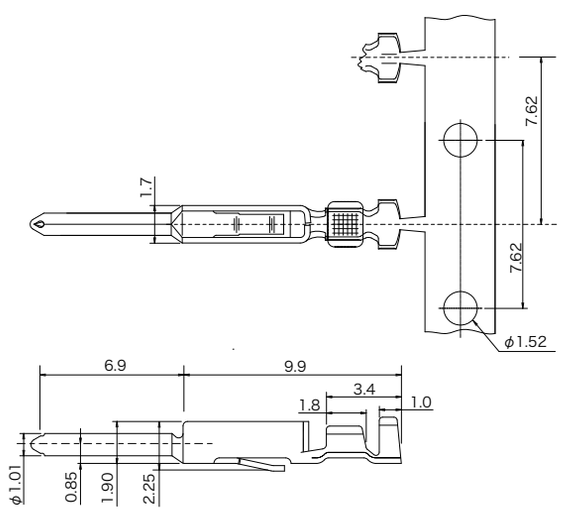

● Socket Contact

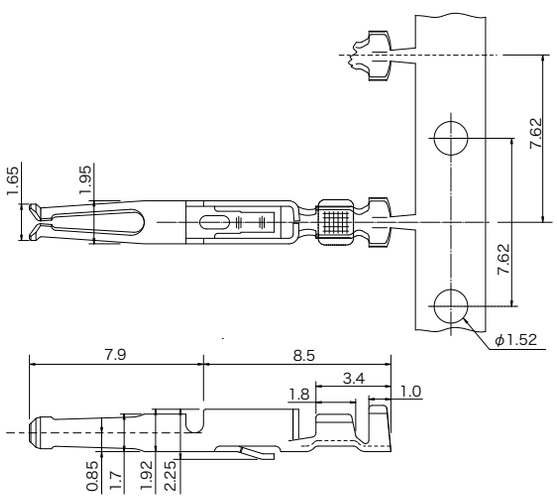

Part Number	Plating	
	Mating Area	Crimp Area
17D-3 □□ PCR(□□)	Au Flash over Nickel Plating	Au Flash over Nickel Plating

Part Number	Plating	
	Mating Area	Crimp Area
17D-3 □□ SCR(□□)	Au Flash over Nickel Plating	Au Flash over Nickel Plating

◎ Specifications and/or dimensions in this catalog are subject to change without notice.
Please varify the latest specifications with our drawings.

Unit : mm

Tools

● Manual wiring tool

P/N : 357J-10422 (For 17D- □□ 3 □ CR Contact type)
P/N : 357J-15475 (For 17D- □□ 4 □ CR Contact type)

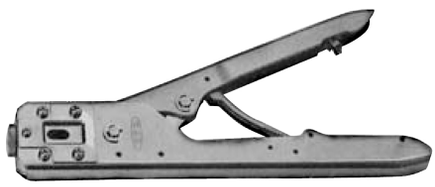

● Tool for inserting/removing contact

P/N : 357J-10309

● Tool for erecting contact ratch

P/N : 357J-10310
Used to erect ratch after removing contact inserted into insert-block by error.

◎ Specifications and/or dimensions in this catalog are subject to change without notice.
Please varify the latest specifications with our drawings.