0.20 mm Pitch Ultra-low Profile FPC Back-lock Connector

RoHS2

FF26 Series 【Upper Contact】

DDK Ltd.

OUTLINE

FF26 series is 0.2mm pitch, denpth 3.80mm and 0.66mm connector height.
Ultra-low profile FPC connector .

FEATURE

- DDK's original rotate oval cam lock mechanism; "Back-lock" system ensure the reliable connection.
- The contact position is upper contact.
- Back-lock structure ensures retention from inadvertent upward pulling of the FPC.
- Connectors are delivered with the lock lever opened. Time saving for FPC inserting operation.
- Nickel barrier prevents solder wicking.
- Halogen free correspondence presence

Note : Please do not close the lock lever without inserting the FPC.

APPLICATIONS

Mobile phone, Notebook PC, PDA, other Portable devices

SPECIFICATIONS

Rated Voltage	50V AC (r.m.s.)
Rated Current	0.2A / Contact
Dielectric Withstand Voltage	200V AC (r.m.s.) / 1 minute
Insulation Resistance	50 M Ω min. at 250V DC
Contact Resistance	80m Ω max.

MATERIAL/FINISH

RoHS Compliant

Item	Material / Finish
Conatct	Copper Alloy / Au (Flash) over Ni
Housing	LCP Resin (UL94V-0) / Ivory
Lock lever	PPS Resin (UL94V-0) / Black

◎ Specifications and/or dimensions in this catalog are subject to change without notice.
Please varify the latest specifications with our drawings.

Unit : mm

▶0.20mm Pitch FPC Connector (Upper Contact)

FF26- □□ A-R11A-3H

① ② ③ ④ ⑤ ⑥ ⑦ ⑧

① Series	FF26
② Number of Contact	Refer to th table 1
③ Contact Position	A : Upper Contact Applicable PCB Thickness : 0.12±0.03mm
④ Contact Style	R : Right Angle
⑤ Contact Tail Length	1 : 0.30mm
⑥ Contact Plating	1 : Au (Flash) over Ni
⑦ Lock Lever Style	A : Standard B : Long Type
⑧ Material	3H : Halogen Free Correspondence No Digit : Without Halogen Free Correspondence

Dimensions

Odd Number of Contact

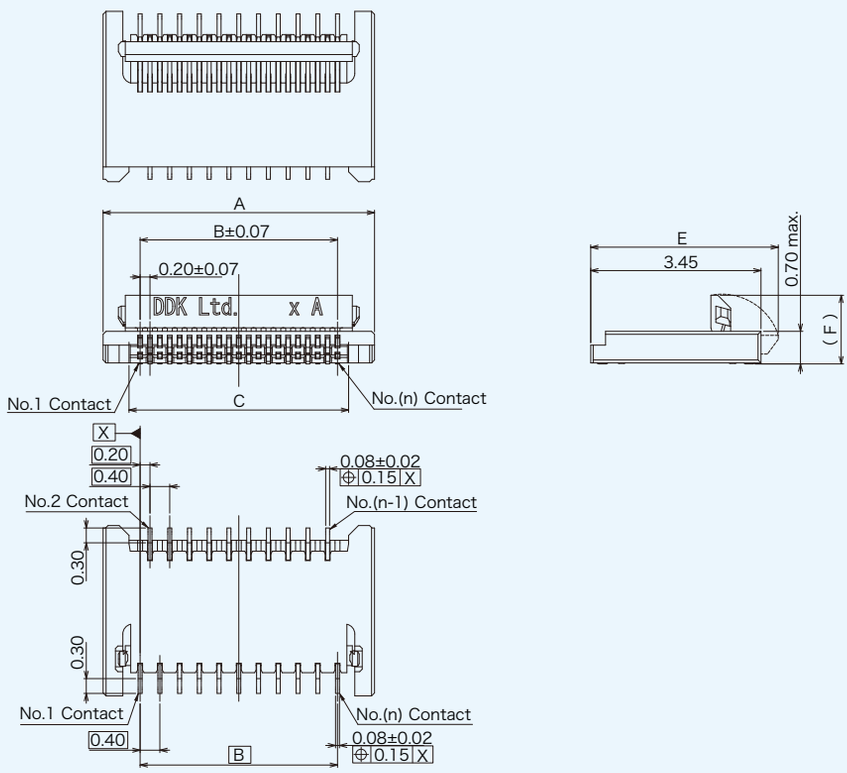

Recommended PCB Mounting Dimensions

Contacts are arranged zigzag on from No.1 contact.

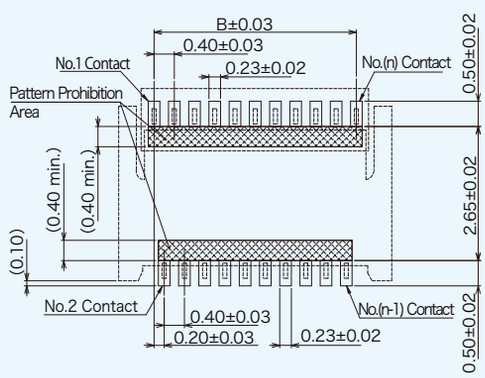

Recommended FPC Dimensions

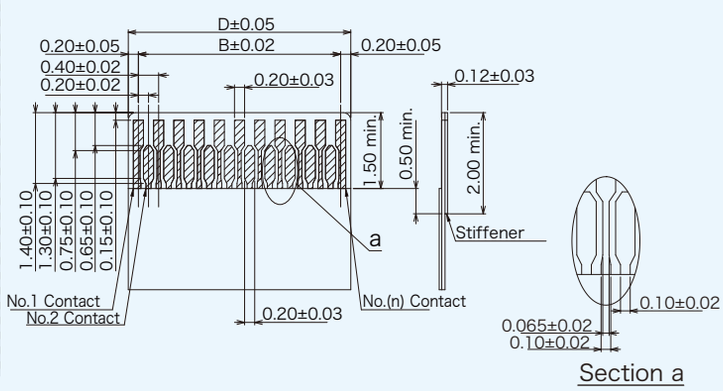

◎ Specifications and/or dimensions in this catalog are subject to change without notice.
Please varify the latest specifications with our drawings.

Unit : mm

▶ 0.20mm Pitch FPC Connector (Upper Contact)

Dimensions

Even Number of Contacts

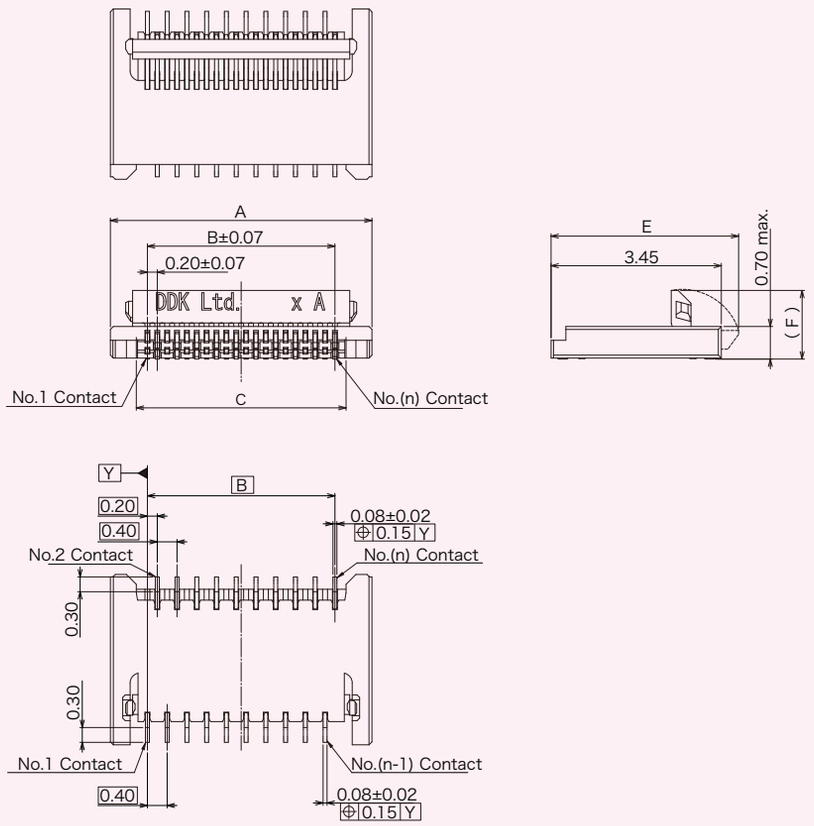

Recommended PCB Mounting Dimensions

Contacts are arranged zigzag from No.1 contact.

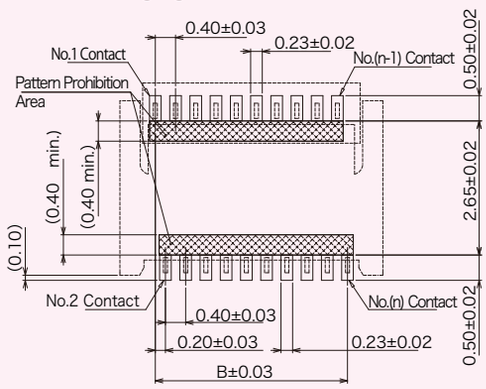

Recommended FPC Dimensions

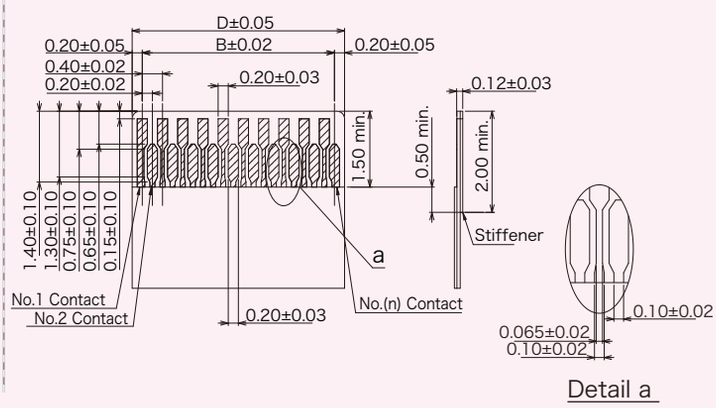

Table–1

Part Number	Number of Contact	A	B	C	D	E	F
FF26-39A-R11A-3H	39	9.10	7.60	8.05	8.00	3.80	(1.39)
FF26-80A-R11B	80	17.30	15.80	16.25	16.20	4.00	(1.59)

◎ Specifications and/or dimensions in this catalog are subject to change without notice.
Please varify the latest specifications with our drawings.

Unit : mm

Package Specifications

■ Reel Dimensions

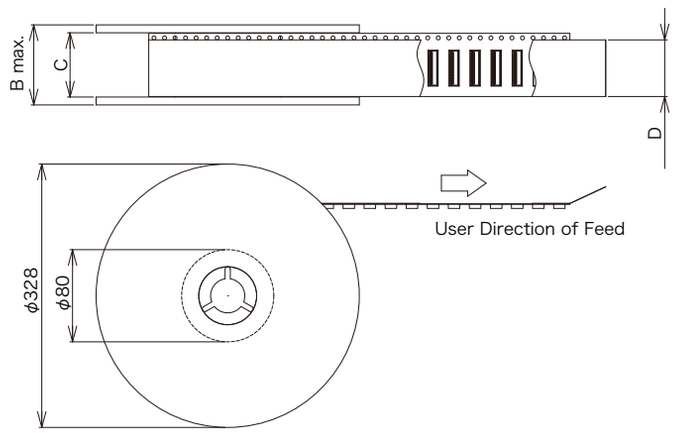

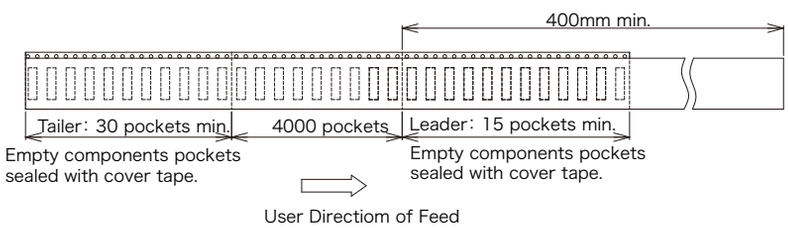

■ Emboss tape Dimensions

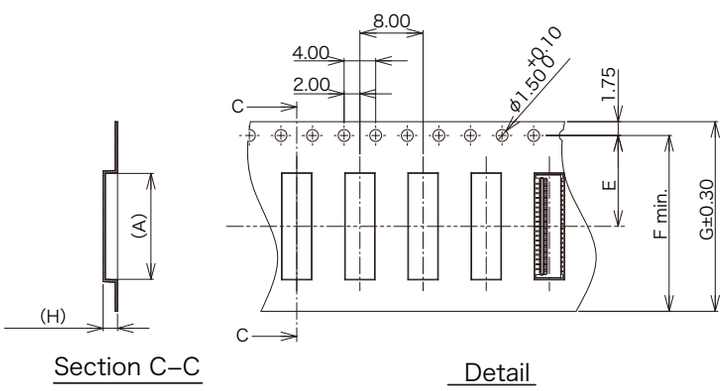

Part Number	Number of Contact	A	B	C	D	E	F	G	H
FF26-39A-R11A-3H	39	9.40	30.4	24.4	21.5	11.5	22.3	24.0	(1.84)
FF26-80A-R11B	80	17.6	38.4	32.4	25.5	14.2	28.4	32.0	(2.04)

■ Quantity : 4000pcs./ Reel

◎ Specifications and/or dimensions in this catalog are subject to change without notice.
Please varify the latest specifications with our drawings.